HONEYWELL PART NUMBER
V15T16-CZ100A06-K
PRODUCT CODE
CFW2045

REV	DOCUMENT	CHANGED BY	CHECK
A	0038670	VS 10APR08	BLR

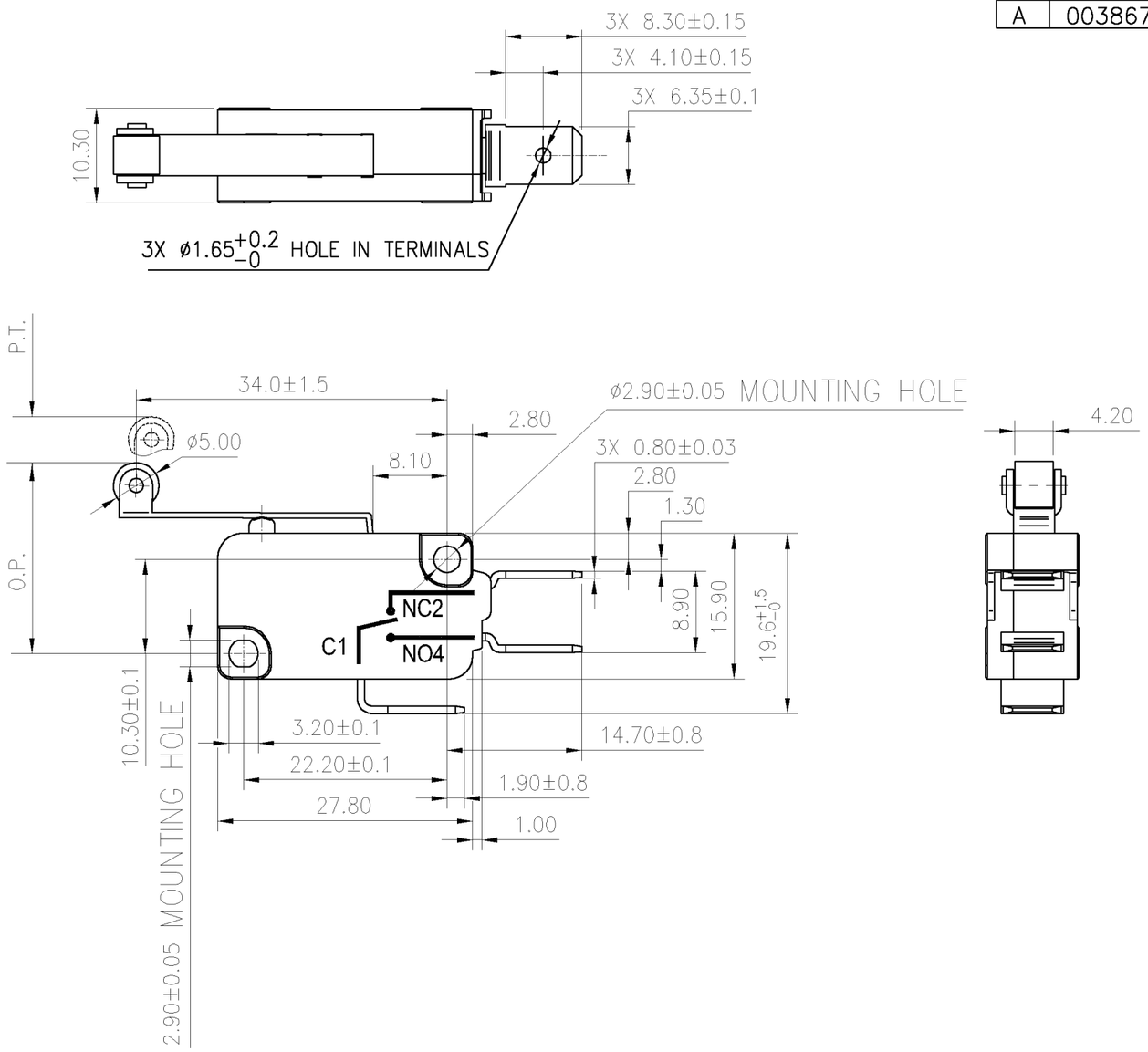

NOTES:
1. TERMINALS WILL ACCEPT 6.35mm WIDE QUICK CONNECT RECEPTACLES AND COMPLY WITH EN61058-1 REQUIREMENTS.

CHARACTERISTICS	
OPERATING FORCE:	60gf MAX.
DIFFERENTIAL FORCE:	
RELEASE FORCE:	10gf MIN.
FREE POSITION:	
OPERATING POSITION:	20.6±1.6MM.
PRE-TRAVEL:	3.2MM MAX.
DIFFERENTIAL TRAVEL:	1.2MM MAX.
OVER-TRAVEL:	1.3MM MIN.
FULL OVERTRAVEL FORCE:	

ELECTRICAL DATA

CONTACT ARRANGEMENT
S.P.D.T

16(4)A 250V~
25T125 µ 5E4

16A 1/2HP 125/250VAC

DESIGN UNITS: MM
TOLERANCES UNLESS NOTED:

NO PLACE	X	±	±
ONE PLACE	.X	±	±
TWO PLACE	.XX	±	± 0.40
THREE PLACE	.XXX	±	±
ANGLES	X	±	± 2°

THIRD ANGLE PROJECTION

DRAWN	KSR	01APR08
CHECK	RJ	01APR08

THIS DRAWING COVERS A PROPRIETARY ITEM AND IS THE PROPERTY OF HONEYWELL. THIS DRAWING IS NOT TO BE COPIED OR USED WITHOUT THE PERMISSION OF HONEYWELL.

INTERPRET PER ASME Y14.5M-1994 OTHER HONEYWELL ENGINEERING STANDARDS MAY APPLY

AutoCAD

Honeywell

TITLE
SWITCH - BASIC

SIZE	TYPE	CAGE CODE	DRAWING NAME	REV
B	I		V15T16-CZ100A06-K	A

SCALE NTS | SHEET 1 OF 1